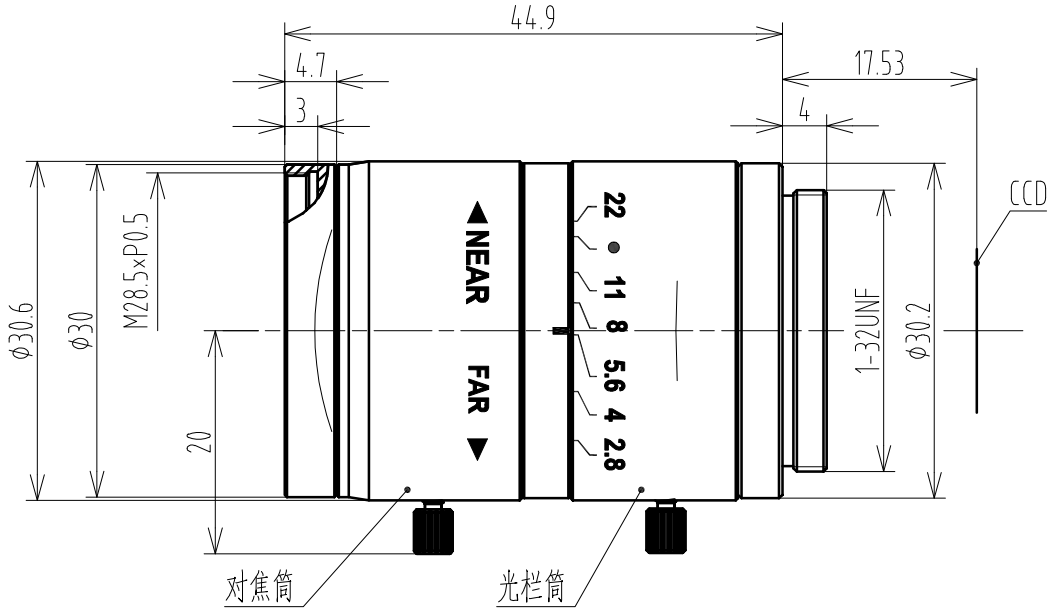

1/1.8" F2.8 C Mount					Working distance	Optical Magnification	1/1.8" Field of View(mm)	
Focal Length		f=50mm			mm		H	V
F/NO		F=2.8-22			1200	0.043X	164.2	112.6
Image Size		1/1.8"(7.2×5.3mm)	1/2.5"(5.76×4.32mm)	1/3"(4.8×3.6mm)	1100	0.047X	150.0	112
Angle FOV	H	8.2	6.6	5.5	1000	0.052X	135.8	101.4
	V	6.1	4.9	4.1	950	0.055X	128.7	96.1
	D	10.2	8.2	6.9	900	0.059X	121.6	90.8
Object Dimension at WD.300mm	H	36.1	29.4	24.5	850	0.062X	114.5	85.5
	V	27.1	22.1	18.4	800	0.066X	107.4	80.2
	D	45	36.1	30.6	750	0.071X	100.3	74.9
Distortion (TV)		<0.05%			700	0.076X	93.2	69.6
Focus distance(min)		300mm			650	0.083X	86.1	64.3
Flange back		17.526mm in air			600	0.090X	78.9	59
Back focus		17.4-27.1mm in air			550	0.099X	71.9	53.7
Filter screw size		M28.5×P0.5			500	0.110X	64.8	48.4
Front/Rear Effective Dia		Front Φ17.4mm Rear Φ8mm			450	0.124X	57.6	43.1
Mount		C-Mount			400	0.141X	50.5	37.7
Temperature Range		-10~+50°C			350	0.164X	43.4	32.4
Storage Temperature Range		-20~+60°C			300	0.196X	36.1	27.1