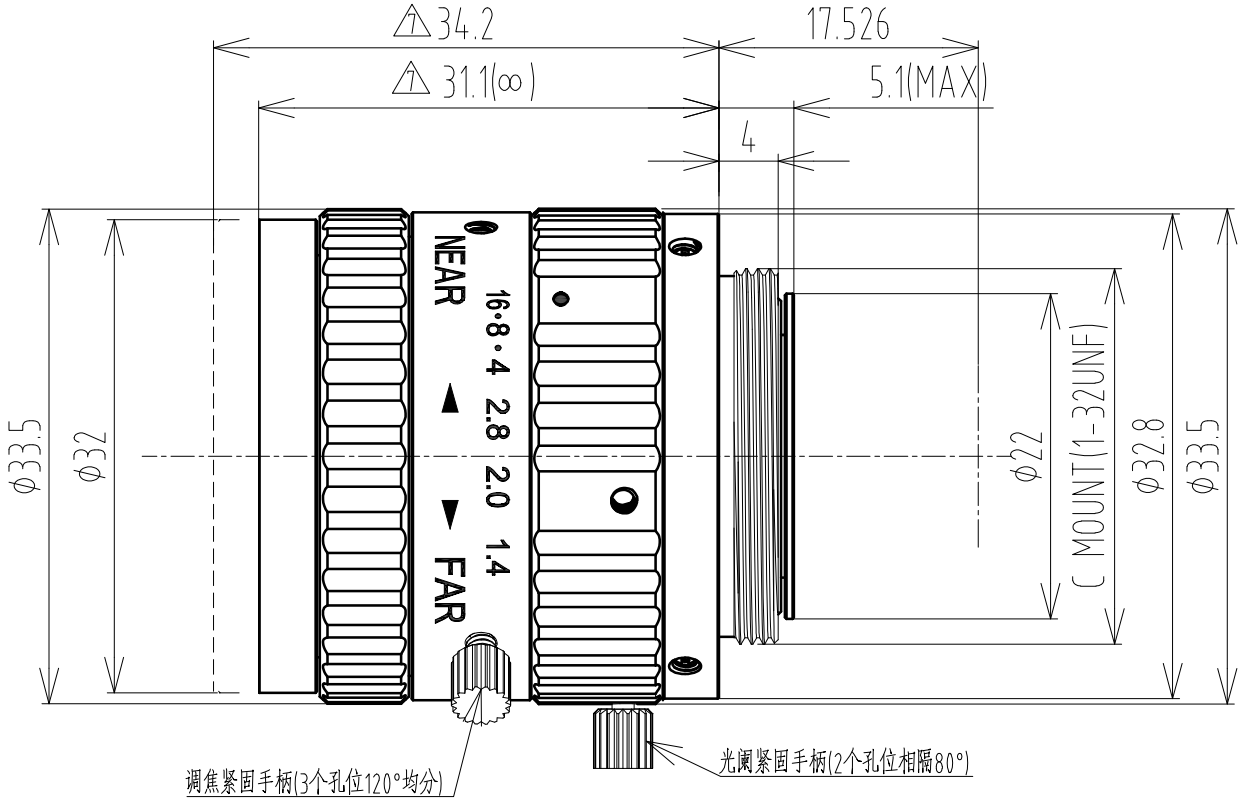

2/3" F1.4/16 C Mount					Working distance	Optical Magnification	2/3" Field of View(mm)	
Focal Length		f=16mm			mm		H	V
Max Diameter (Ratio)		F=1:1.4~16			900	0.018X	503.2	376.8
Picture Size		2/3"(8.8×6.6mm)	1/2"(6.4×4.8mm)	1/3"(4.8×3.6mm)	850	0.019X	475.6	356.2
Angle	H	30.3°	22.3°	16.8°	800	0.020X	448.0	335.5
	V	23°	16.8°	12.6°	750	0.021X	420.4	314.8
	D	37.3°	27.8°	20.9°	700	0.023X	382.6	287
Object Dimension at 300mm	H	169.2mm	123.1mm	92.3mm	650	0.024X	366.7	275
	V	△6 126.9mm	92.3mm	69.2mm	600	0.026X	338.5	253.8
	D	211.5mm	153.9mm	115.4mm	550	0.029X	303.4	227.6
Distortion (TV)		<0.1%	<0.3%	<0.1%	500	0.031X	283.9	212.9
Focus distance(min)		0.1m			450	0.035X	251.4	188.6
Flange back		17.526mm in air			400	0.039X	225.6	169.2
Back focus		12.7mm in air			350	0.044X	200	150
Filter screw size		M30.5×0.5			300 △6	0.052X	169.2	126.9
Front/Rear Effective Dia		Front ϕ19mm Rear ϕ14.2mm			250	0.061X	144.3	108.2
Mount		C-Mount			200	0.076X	115.8	86.8
Temperature Range		-10~+50°C			150	0.100X	88	66
Storage Temperature Range		-20~+60°C			100	0.145X	60.7	45.5

A4