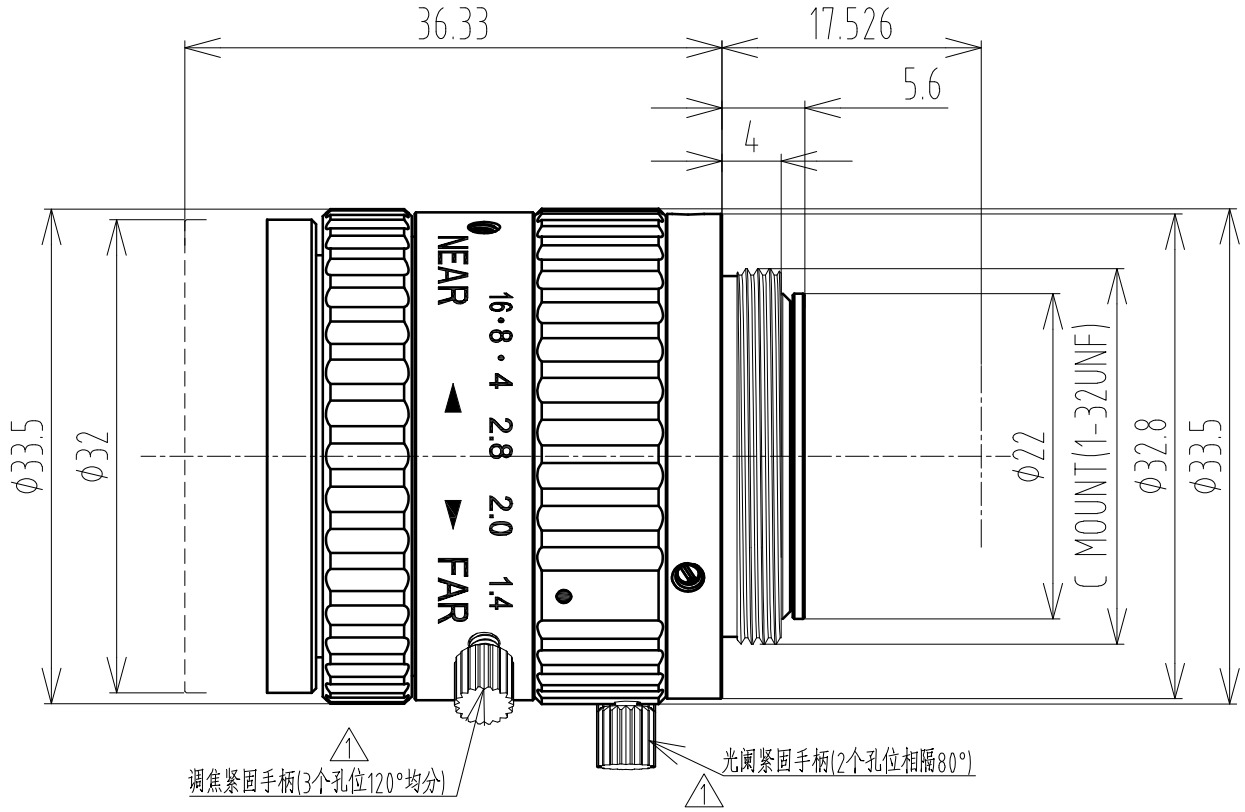

2/3" F1.4/25 C Mount					Working distance	Optical Magnification	2/3" Field of View(mm)	
Focal Length		f=25mm			mm		H	V
Max Diameter (Ratio)		F=1:1.4~16			900	0.028X	314.3	235.7
Picture Size		2/3"(8.8×6.6mm)	1/2"(6.4×4.8mm)	1/3"(4.8×3.6mm)	850	0.029X	303.4	227.6
Angle	H	20°	14.6°	11°	800	0.031X	283.9	212.9
	V	15°	11°	8.2°	750	0.033X	266.7	200
	D	24.6°	18.2°	13.7°	700	0.036X	244.4	183.3
Object Dimension at 300mm 4	H	104.8mm	76.2mm	57.1mm	650	0.039X	225.6	169.2
	V	78.6mm	57.1mm	42.9mm	600	0.042X	209.5	157.1
	D	131mm	95.2mm	71.4mm	550	0.046X	191.3	143.5
Distortion (TV)		<0.2%	<0.05%	<0.05%	500	0.050X	176	132.0
Focus distance(min)		0.1m 3			450	0.056X	157.1	117.9
Flange back		17.526mm in air			400	0.063X	139.7	104.8
Back focus		12.25mm in air			350	0.072X	122.2	91.7
Filter screw size		M30.5×0.5			300 4	0.084X	104.8	78.6
Front/Rear Effective Dia		Front ϕ22.7mm Rear ϕ12.6mm			250	0.100X	88.0	66.0
Mount		C-Mount			200	0.126X	69.8	52.4
Temperature Range		-10~+50°C			150	0.168X	52.4	39.3
Storage Temperature Range		-20~+60°C			100	0.253X	34.8	26.1

A4